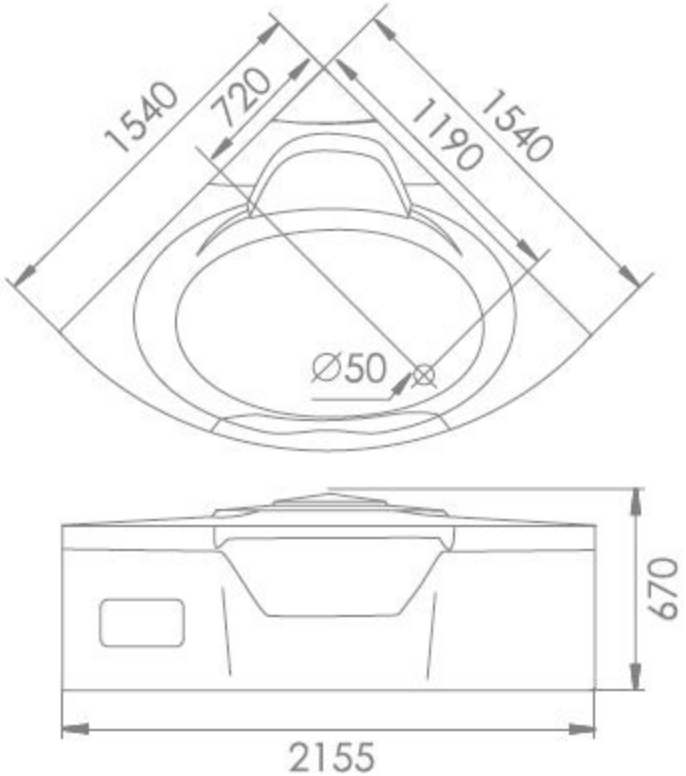
1540
720
1190
1540
Ø50
670
2155

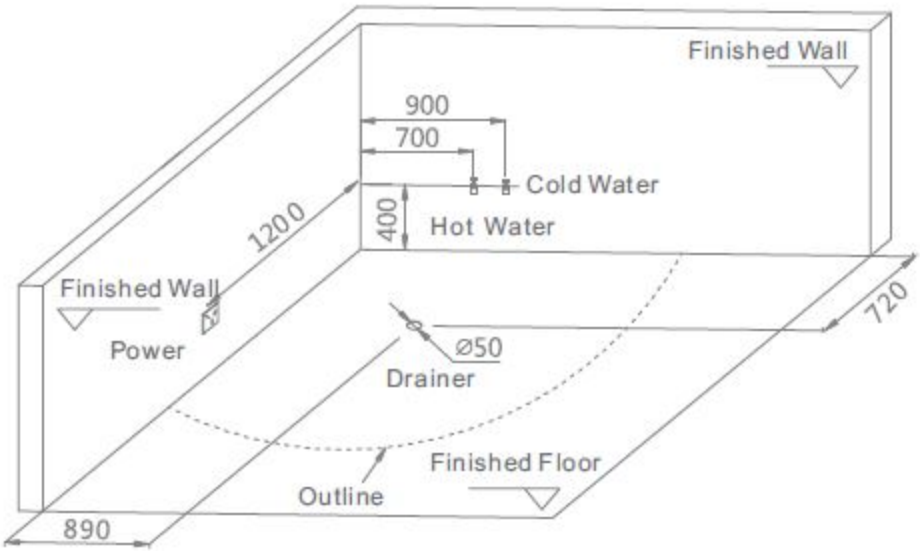
Finished Wall
900
700
Cold Water
400
Hot Water
1200
Finished Wall
Power
Ø50
Drainer
720
Finished Floor
Outline
890

G9025